# SLOTTED STRUT ORDER FORM

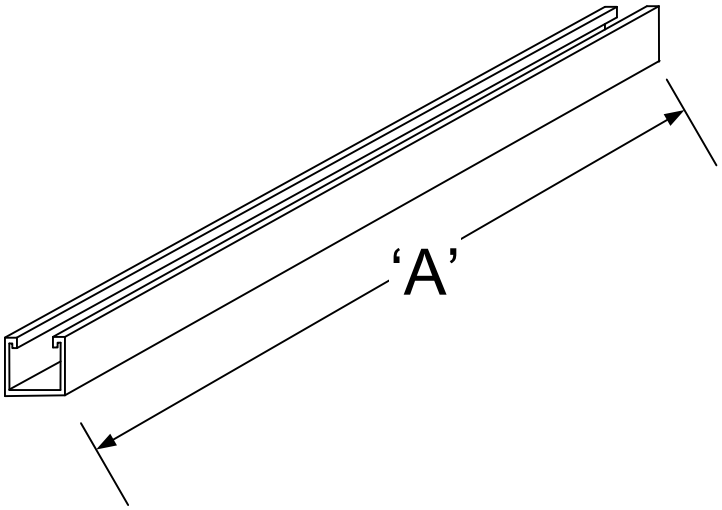


| SIZE KEY |
|---|
| - 2 X 4 ☐ |
| - 4 X 4 ☐ |
| - 4 X 6 ☐ |
| - OTHER_____ |

| MATERIAL KEY |
|---|
| BASE |
| RD ☐ |
| PTRW ☐ |
| PT ☐ |
| OTHER_____ |
| STRUT |
| S – 7/8 ZINC COATED ☐ |
| D – 1-5/8 ZINC COATED ☐ |
| SG – 7/8 GALV ☐ |
| DG – 1-5/8 GALV ☐ |
| OTHER_____ |

| QTY | A | SIZE (SEE KEY) | MATERIAL SIZE (SEE KEY) | STRUT | PAD SIZE |
|---|---|---|---|---|---|
| | | | | | |
| | | | | | |
| | | | | | |
| | | | | | |
| | | | | | |

UNLESS OTHERWISE REQUESTED ASSEMBLY ORDERS INCLUDE:
- CADDY PAGE 65
- B-LINE PAGES 155 - 157

TOTAL ORDERED:

DATE ORDERED:

ORDERED BY:

DATE NEEDED AT JOBSITE:

CONTACT:

#:

LOCATION AT JOBSITE:

SPECIAL INSTRUCTIONS:

| JOB NAME: | JOB #: | Schaeffer Electric Company, Inc. | ISSUE DATE: |
|---|---|---|---|
| JOB PHASE: | COST CODE: | | Email to Prefab |